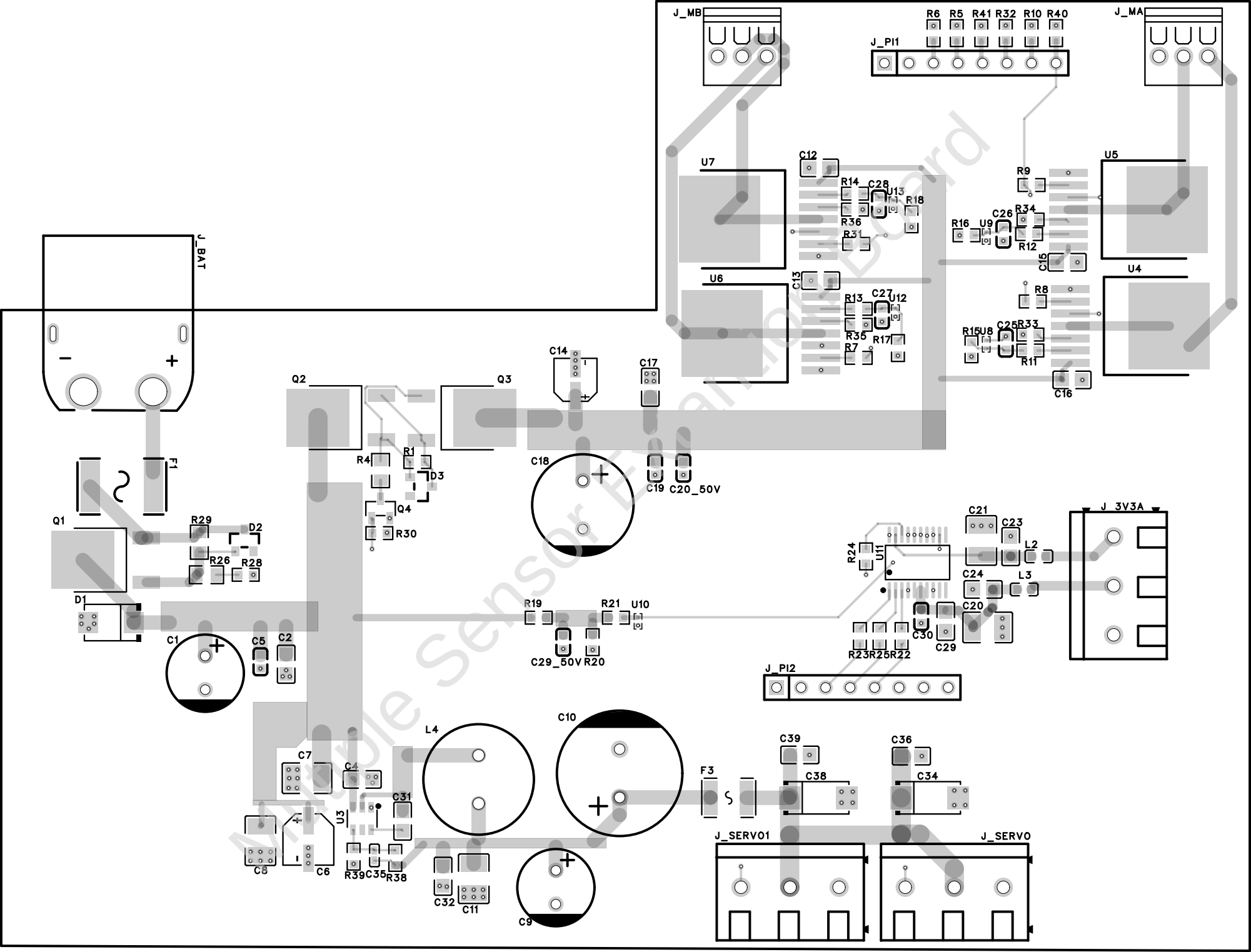
J_MB
J_MA
J_PI1
R6 R5 R41 R32 R10 R40
U7
U6
U5
U4
C12
C13
R14 C28 U13 R18
R36
R31
R9
R34
C26
R16 U9
R12
C15
R8
R13 C27 U12
R35
R7
R17
R15 U8 C25 R33
R11
C16
J_BAT
F1
Q1
Q2
Q3
Q4
R29
D2
R26 R28
D1
R4
R1
D3
R30
C14
C17
C18
C19 C20_50V
C1
C5
C2
R19
R21 U10
C29_50V R20
R24
U11
C21
C23
L2
C24
L3
C20
C30
C29
R23 R25 R22
J_3V3A
J_PI2
C7
C4
C31
U3
C8
C6
R39 C35 R38
L4
C32
C11
C10
C9
F3
C39
C38
C36
C34
J_SERVO1
J_SERVO
Multiple Sensor Expansion Board

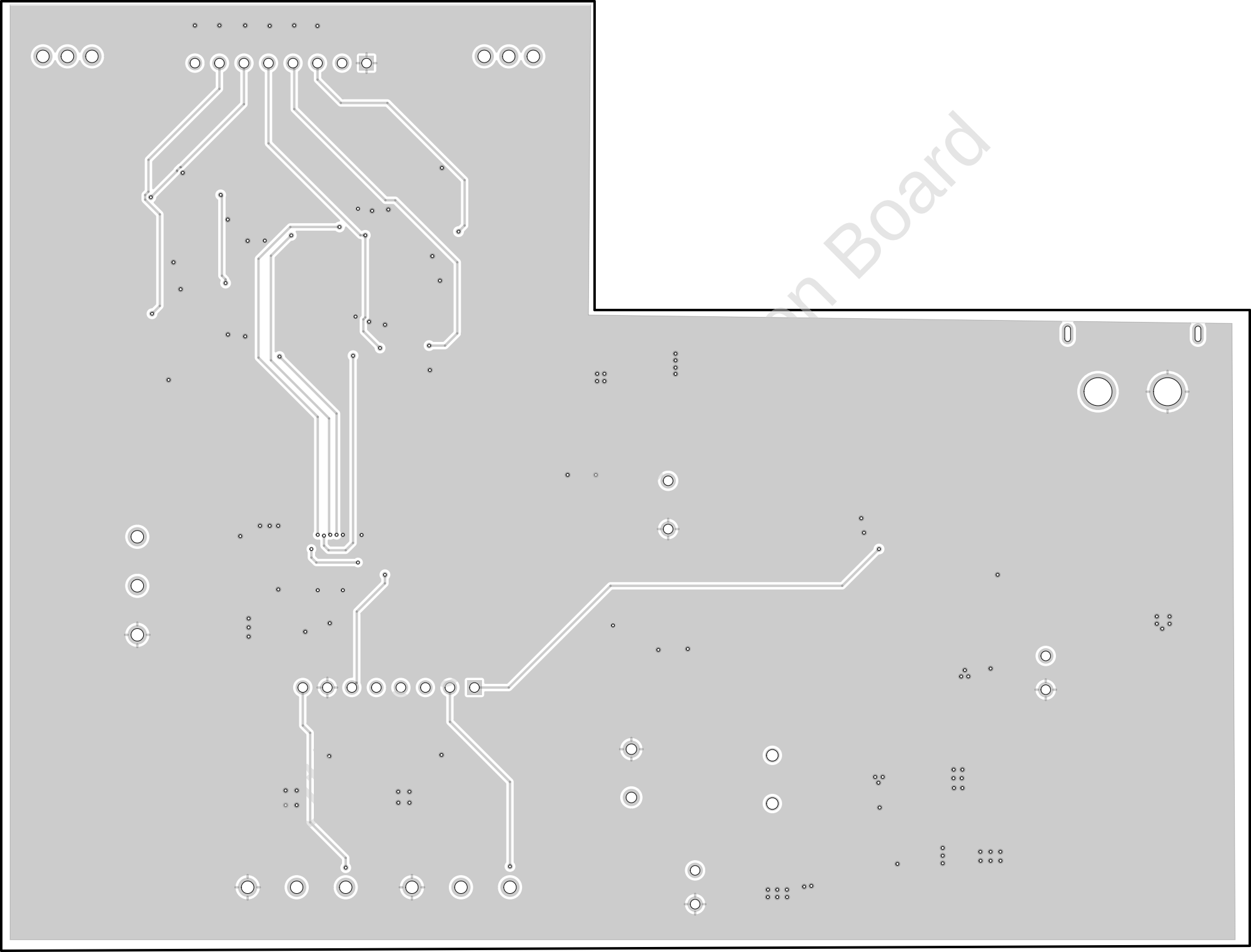

Mutiple Sensor Extantion Board